RevNo	Revision note	Date	DWN	Checked
00	First issue	Feb.08.2019	E.H.Park	K.J.Kim

LINE BLIND VALVE
TYPE : COMPACT
SIZE : 600A (24")
PRESSURE RATE : JIS 10K
QTY : 1

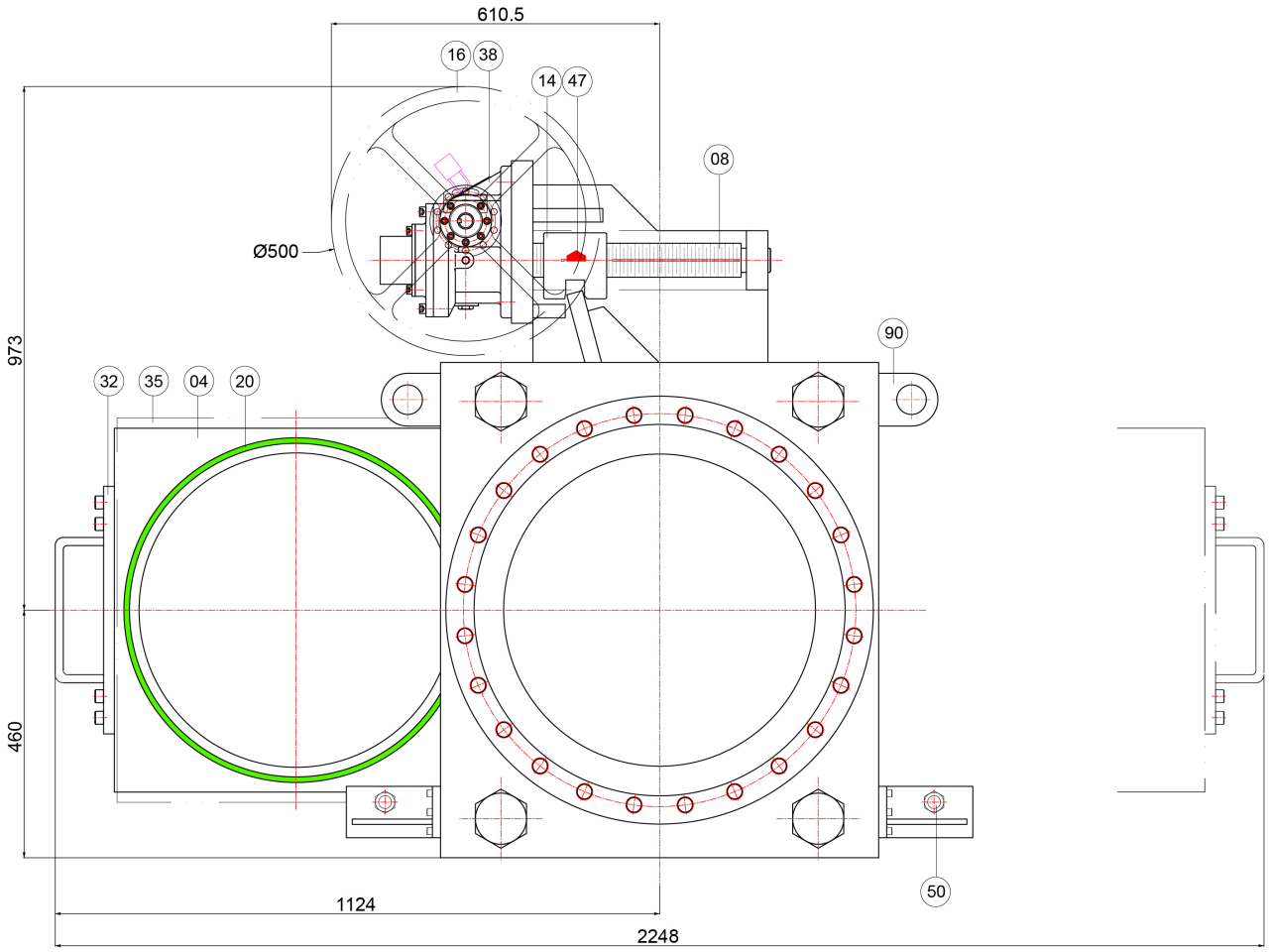

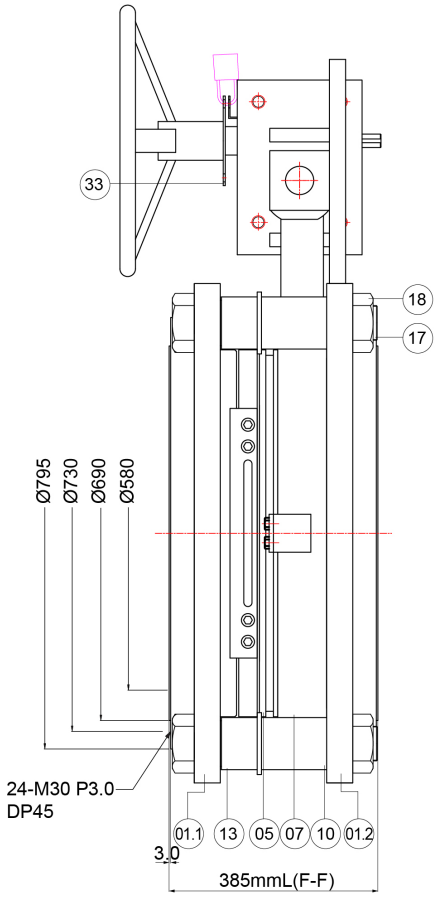

Design Note

Media : COG, Mixed Gas
Operation : Hand Wheel + Worm Gear
Pressure Rate : JIS 10K
End Connection : JIS B 2220-2012, Flanged RF
Design Pressure : 10 kg/cm^2
Design Temperature : Ambient
Seat Hyd. Test (At ambient) : 11 kg/cm^2
Shell Hyd. Test (At ambient) : 15 kg/cm^2
F-F Dimension : 385mm
* Gasket : Viton O-Ring (Hardness Shore A 70)

Specification Of Compliance

Material : ASME Sec. II
Flange : JIS B 2220-2012
Body : ASME B16.34
Stream Plate : ASME Sec. VIII Div.1 App.2
Blind : ASME B31.3 para 304.5.3
Welding Qualifications : ASME Sec. IX
Inspection and Test : API 598

No.	PART NUMBER	PART NAME	MATERIAL	QTY	REMARK	No.	PART NUMBER	PART NAME	MATERIAL	QTY	REMARK
						16	CL24JS10MB7BO	HEX.BOLT	SA193-B7	4	M64x338mmL
90	CL24JS10M36LG	LUG	SA36	1		16	CL24JS10M126WH	HAND WHEEL	SA126-B	1	O.D. 500mm
50	CL24JS10M304AR	AUX.ROLLER	SA276-304	4		14	CL24JS10M103TN	TRAVELING NUT	SB103	1	
47	CL24JS10M103ID	INDICATOR	SB103	1		13	CL24JS10M304GU	GUIDE ROLLER	SA276-304	4	
38	CL24JS10MSJ73WG	Wormgear Ass'y	P	1		10	CL24JS10M45CYO	YOKE	SA1045	4	
35	CL24JS10M304CO	GASKET COVER	SA240-304	1		08	CL24JS10M304SC	SCREW SHAFT	SA276-304	1	
33	CL24JS10M304LD	LOCKING DEVICE	SA276-304	1		07	CL24JS10M304GE	GEARSET	SA240-304	1	
32	CL24JS10M304EN	END PLATE	SA240-304	2		05	CL24JS10M304SE	SEAT	SA240-304	1	
23	CL24JS10MGRWP	WIPER	GRAPHITE	1		04	CL24JS10M304BL	BLIND PLATE	SA240-304	1	
22	CL24JS10MFKMSOR	SEAT O-RING	FKM	1	12mmT x I.D. 600mm	02	CL24JS10M516PI	PIPE	SA516-70	1	Trim E308L Built up
20	CL24JS10MFKMBOR	BLIND O-RING	FKM	4	12mmT x I.D. 600mm	01.2	CL24JS10M516BD	BODY.B	SA516-70	1	
18	CL24JS10M2HNU	HEX.NUT	SA194-2H	4	M64	01.1	CL24JS10M516BD	BODY.A	SA516-70	1	Trim E308L Built up

MODEL: SLFX-150	NAME/CLASS: LINE BLIND V/V (Compact Type) JIS 10K, 600A	DWN	Feb.08.2019	E.H.Park	
SPEC.: SL24-JS10-CS/304/FKM		CHKD	Feb.08.2019	K.J.Kim	
DRAWING NO.: CLW 19047-Q-2		APRV	Feb.08.2019	B.R.Kim	
SAMMI MACHINERY Co., Ltd. LINE BLIND SYSTEM	Projection: CAD	PROJECT	N.WEIGHT: abt. 1200kg	PAGE: 2/3	
	Dimension: mm	APPROVED BY CUSTOMER			

Any unauthorized review, use, disclosure or distribution is prohibited.