RevNo	Revision note	Date	Signature	Checked
00	First issue	Mar.14.2019	E.H.Park	K.J.Kim

LINE BLIND VALVE
TYPE : COMPACT
SIZE : 800A (32")
PRESSURE RATE : JIS 10K
QTY : 1

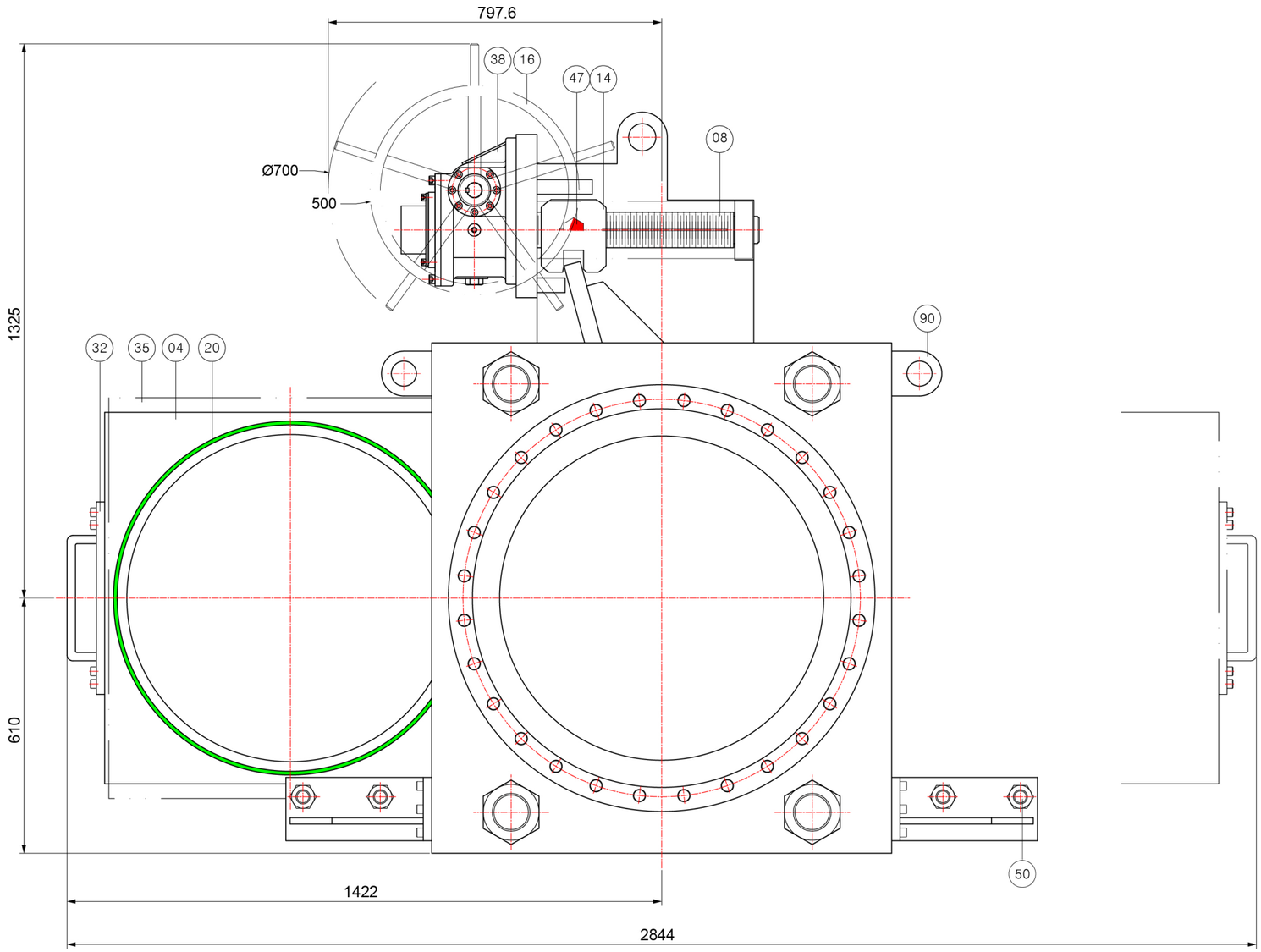

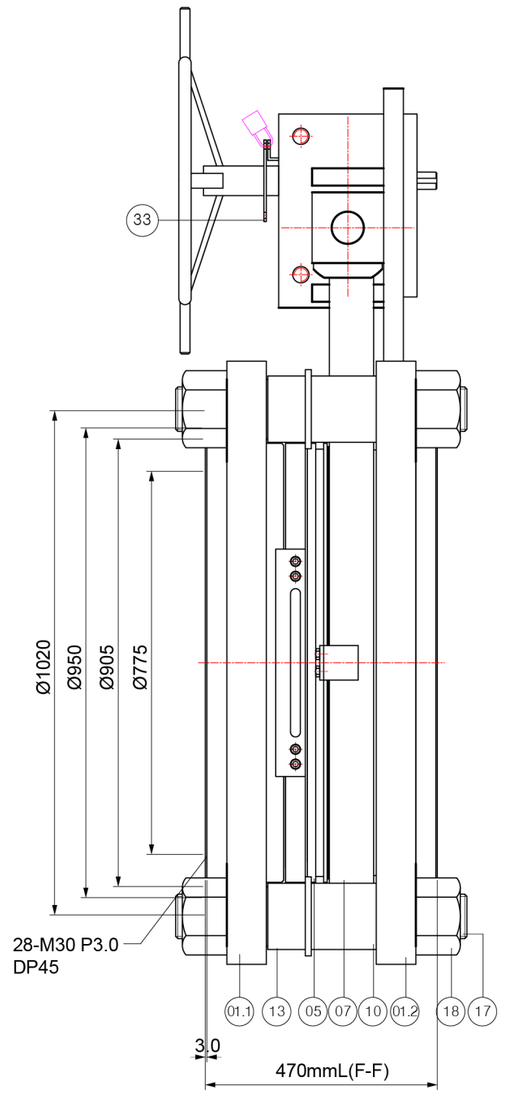

Design Note

Media : COG, Mixed Gas
Operation : Hand Wheel + Worm Gear
Pressure Rate : JIS 10K
End Connection : JIS B 2220-2012, Flanged RF
Design Pressure : 10 kg/cm^2
Design Temperature : Ambient
Seat Hyd. Test (At ambient) : 11 kg/cm^2
Shell Hyd. Test (At ambient) : 15 kg/cm^2
F-F dimension : 470mm
* Gasket : Viton O-ring (Hardness Shore A 70)

Specification Of Compliance

Material : ASME Sec. II
Flange : JIS B 2220-2012
Body : ASME B16.34
Stream Plate : ASME Sec. VIII Div.1 App.2
Blind : ASME B31.3 para 304.5.3
Welding Qualifications : ASME Sec. IX
Inspection and Test : API 598

No.	PART NUMBER	PART NAME	MATERIAL	Q'TY	REMARK	No.	PART NUMBER	PART NAME	MATERIAL	Q'TY	REMARK
						17	CL32JS10MB7BO	STUD BOLT	SA193-B7	4	M90x590mmL
90	CL32JS10M36LG	LUG	SA36	3		16	CL32JS10M126WH	HAND WHEEL	SA126-B	1	O.D.500mm
50	CL32JS10M304AR	AUX.ROLLER	SA276-304	4		14	CL32JS10M103TN	TRAVELING NUT	SB103	1	
47	CL32JS10M304ID	INDICATOR	SB103	1		13	CL32JS10M304GU	GUIDE ROLLER	SA276-304	4	
38	CL32JS10MSJ95	Wormgear Ass'y	P	1		10	CL32JS10M45CYO	YOKE	SA1045	4	
35	CL32JS10M304BC	O-RING COVER	SA240-304	1		08	CL32JS10M304SC	SCREW SHAFT	SA276-304	1	
33	CL32JS10M304LD	LOCKING DEVICE	SA240-304	1		07	CL32JS10M304GE	GEARSET	SA240-304	1	
32	CL32JS10M304EN	END PLATE	SA240-304	2		05	CL32JS10M304SE	SEAT	SA240-304	1	
23	CL32JS10MGRWI	WIPER	GRAPHITE	1		04	CL32JS10M304BL	BLIND PLATE	SA240-304	1	
22	CL32JS10MFKMOR	SEAT O-RING	FKM	1	12mmT x I.D. 800mm	02	CL32JS10M516PI	PIPE	SA516-70	1	Trim E308L Built up
20	CL32JS10MFKMOR	BLIND O-RING	FKM	4	12mmT x I.D. 800mm	01.2	CL32JS10M516BD	BODY.B	SA516-70	1	
18	CL32JS10M2HNU	HEX.NUT	SA194-2H	8	M90-heavy	01.1	CL32JS10M516BD	BODY.A	SA516-70	1	Trim E308L Built up

MODEL SLFX-150	NAME/CLASS LINE BLIND V/V (Compact Type) JIS 10K, 800A	DWN	Mar.14.2019	E.H.Park	
SPEC. CL32-JS10-CS/304/FKM		CHKD	Mar.14.2019	K.J.Kim	
DRAWING NO. CLW 19116-Q		APRV	Mar.14.2019	B.R.Kim	
SAMMI MACHINERY Co., Ltd. LINE BLIND SYSTEM	Projection CAD	PROJECT	N.WEIGHT abt. 2000kg	PAGE 1/1	
	Dimension mm	APPROVED BY CUSTOMER			

Any unauthorized review, use, disclosure or distribution is prohibited.