RevNo	Revision note	Date	DWG	Checked
00	First issue	Feb.08.2019	E.H.Park	K.J.Kim

LINE BLIND VALVE
TYPE : COMPACT
SIZE : 900A (36")
PRESSURE RATE : JIS 10K
QTY : 1

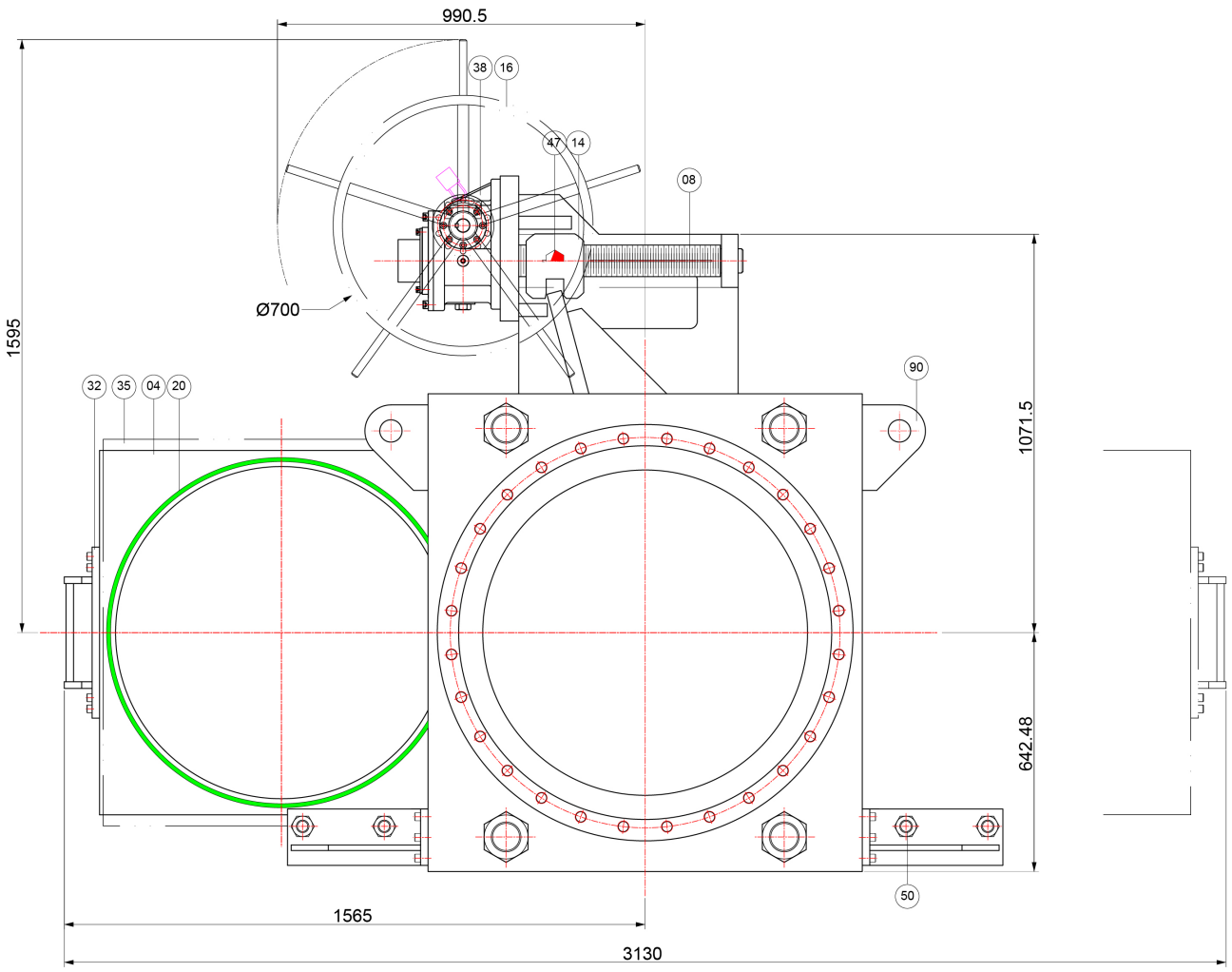

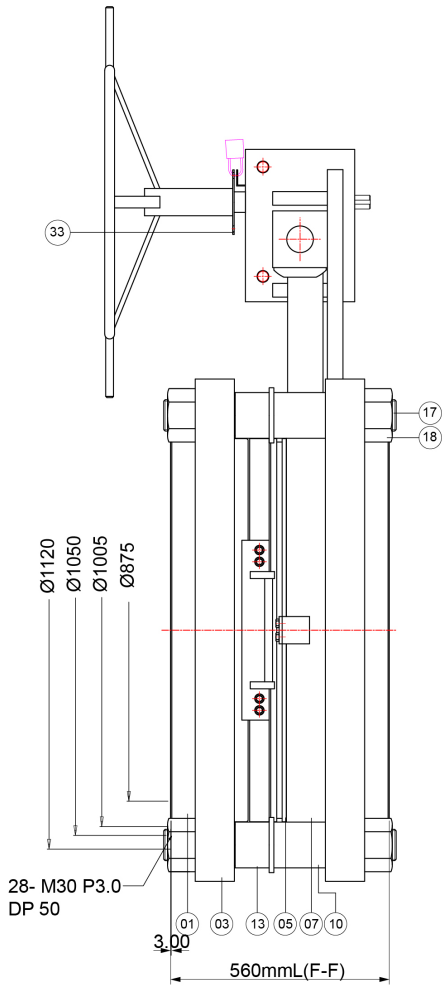

Design Note

Media : COG, Mixed Gas
Operation : Hand Wheel + Worm Gear
Pressure Rate : JIS 10K
End Connection : JIS B 2220-2012, Flanged RF
Design Pressure : 10 kg/cm^2
Design Temperature : Ambient
Seat Hyd. Test (At ambient) : 11 kg/cm^2
Shell Hyd. Test (At ambient) : 15 kg/cm^2
F-F Dimension : 560mm
*Gasket : Viton O-ring (Hardness shore A 70)

Specification Of Compliance

Material : ASME Sec. II
Flange : JIS B 2220-2012
Body : ASME B16.34
Stream Plate : ASME Sec. VIII Div.1 App.2
Blind : ASME B31.3 para 304.5.3
Welding Qualifications : ASME Sec. IX
Inspection and Test : API 598

No.	PART NUMBER	PART NAME	MATERIAL	Q'TY	REMARK	No.	PART NUMBER	PART NAME	MATERIAL	Q'TY	REMARK
						17	CL36JS10MB7BO	STUD BOLT	SA193-B7	4	M80x595mmL
90	CL36JS10MA36LG	LUG	SA36	4		16	CL36JS10MA36HA	HAND WHEEL	SA36	1	O.D.700mm
50	CL36JS10MA304AR	AUX.ROLLER	SA276-304	4		14	CL36JS10M103PU	TRAVELING NUT	SB-103	1	
47	CL36JS10M304ID	INDICATOR	SA240-304	1		13	CL36JS10M304GR	GUIDE ROLLER	SA276-304	4	
38	CL36JS10MPWG	Wormgear Ass'y	P	1		10	CL36JS10M45CYO	YOKE	SA1045	4	
35	CL36JS10M304BC	BLIND COVER	SA240-304	1		08	CL36JS10M304SC	SCREW SHAFT	SA276-304	1	
33	CL36JS10M304LD	LOCKING DEVICE	SA240-304	1		07	CL36JS10M304GE	GEARSET	SA240-304	1	
32	CL36JS10M304ET	END PLATE	SA240-304	4		05	CL36JS10M304SE	SEAT	SA240-304	1	
23	CL36JS10MGRWP	WIPER	GRAPHITE	1		04	CL36JS10M304BL	BLIND PLATE	SA240-304	1	
22	CL36JS10MFKMCOR	SEAT O-RING	FKM	1	12mmT x I.D. 900mm	03	CL36JS10M516ST	STREAM PLATE	SA516-70	2	Trim E308L Built-up
20	CL36JS10MFKMBOR	BLIND O-RING	FKM	4	12mmT x I.D. 900mm	02	CL36JS10M516PI	PIPE	SA516-70	1	Trim E308L Built-up
18	CL36JS10M2HNU	HEX.NUT	SA194-2H	8	M80-Heavy	01	CL36JS10M516FL	FLANGE	SA516-70	2	JIS10K RF

MODEL: SLFX-150	NAME/CLASS: LINE BLIND V/V (Compact Type) JIS 10K, 900A	DWG	Feb.08.2019	E.H.Park	
SPEC.: SL36-JIS10K-CS/SS304/FKM		CHKD	Feb.08.2019	K.J.Kim	
DRAWING NO.: CLW 19047-Q-3		APRV	Feb.08.2019	B.R.Kim	
SAMMI MACHINERY Co., Ltd. LINE BLIND SYSTEM	Projection: CAD	PROJECT	N.WEIGHT: abt. 3800kg	PAGE: 3/3	
	Dimension: mm	APPROVED BY CUSTOMER			

Any unauthorized review, use, disclosure or distribution is prohibited.