RevNo	Revision note	Date	DWN	Checked
00	First issue	Aug.10.2021	S.J.Hwang	K.J.Kim

LINE BLIND VALVE
TYPE : COMPACT
SIZE : NPS 14" (350A)
PRESSURE RATE : ASME CLASS 150
QTY : 1

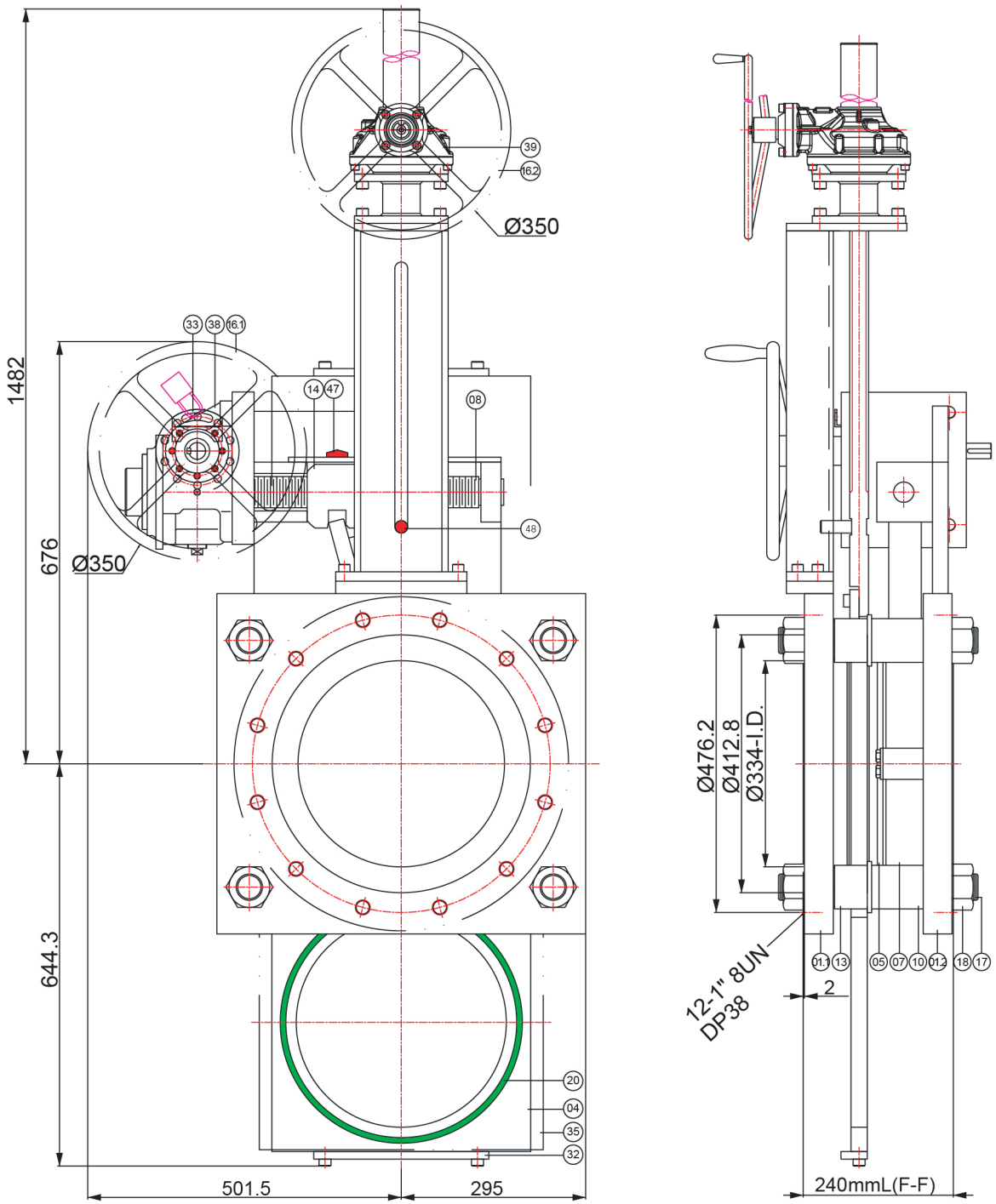

Design Note

Media :
Operation : Hand Wheel + Wormgear
Pressure Rating : ASME CLASS 150
End Connection : ASME B16.5 Flanged RF
Design Pressure : 10 kg/cm^2
Design Temperature : Ambient
Seat Hyd. Test : 11 kg/cm^2
Shell Hyd. Test : 15 kg/cm^2
F-F Dimension : 240mm
*Gasket : Viton O-ring (Hardness Shore A 70)

Specification Of Compliance

Material : ASME/ASTM/JIS Standard
Flange : ASME B16.5
Body : ASME B16.34
Stream Plate : ASME Sec. VIII Div.1 App.2
Blind : ASME B31.3 para 304.5.3
Welding Qualifications : ASME Sec. IX
Inspection and Test : ASME B16.34

No.	PART NUMBER	PART NAME	MATERIAL	Q'TY	REMARK
90	CL14AN150M304LG	LUG	SA240-304	1	
48	CL14AN150M304ID	INDICATOR	SA276-304	1	Blind position
47	CL14AN150M103ID	INDICATOR	SB103	1	Seat tighten & release
39	CL14AN150MPBG	BEVEL GEAR	P	1	
38	CL14AN150MPWG	Wormgear Ass'y	P	1	
35	CL14AN150M316LCO	GASKET COVER	SA240-316L	1	
33	CL14AN150M304LD	LOCKING DEVICE	SA240-304	1	
32	CL14AN150M304ET	END PLATE	SA240-304	2	
23	CL14AN150MGRWI	WIPER	GRAPHITE	1	
22	CL14AN150MFKMSOR	SEAT O-RING	FKM	1	10mmT x I.D.345mm
20	CL14AN150MFKMBOR	BLIND O-RING	FKM	4	10mmT x I.D.345mm
18	CL14AN150MG8NU	HEX.NUT	SA194-8	8	
17	CL14AN150MB8BO	STUD BOLT	SA193-B8	4	
16.2	CL14AN150M126WH	HAND WHEEL	SA126-B	1	O.D. 350mm
16.1	CL14AN150M126WH	HAND WHEEL	SA126-B	1	O.D. 350mm
14	CL14AN150M103TN	TRAVELING NUT	SB103	1	
13	CL14AN150M304GR	GUIDE ROLLER	SA276-304	4	
10	CL14AN150M304YO	YOKE	SA276-304	4	
08	CL14AN150M304SC	SCREW SHAFT	SA276-304	1	
07	CL14AN150M304GE	GEARSET	SA240-304	1	
05	CL14AN150M304SE	SEAT	SA240-304	1	
04	CL14AN150M304BL	BLIND PLATE	SA240-304	1	
02	CL14AN150M304PP	PIPE	SA240-304	1	
01.2	CL14AN150M304BD	BODY.B	SA240-304	1	
01.1	CL14AN150M304BD	BODY.A	SA240-304	1	

MODEL: SLFX-150	NAME/CLASS: LINE BLIND V/V (Compact Type) ASME CLASS150, NPS14"	DWN	Aug.10.2021	S.J.Hwang
SPEC.: CL14-AN150-304/304/FKM		CHKD	Aug.10.2021	K.J.Kim
DRAWING NO.: CLW 210522-Q-3		APRV	Aug.10.2021	B.R.Kim

SAMMI MACHINERY Co., Ltd. LINE BLIND SYSTEM	Projection	CAD	PROJECT	N.WEIGHT	PAGE
	Dimension	mm	APPROVED BY CUSTOMER	abt. 380kg	3/4

Any unauthorized review, use, disclosure or distribution is prohibited.