RevNo	Revision note	Date	Signature	Checked
00	First issue	Aug.10.2021	S.J.Hwang	K.J.Kim

LINE BLIND VALVE
TYPE : SLIDING
SIZE : NPS 20" (500A)
PRESSURE RATE : ASME CLASS 150
QTY : 1

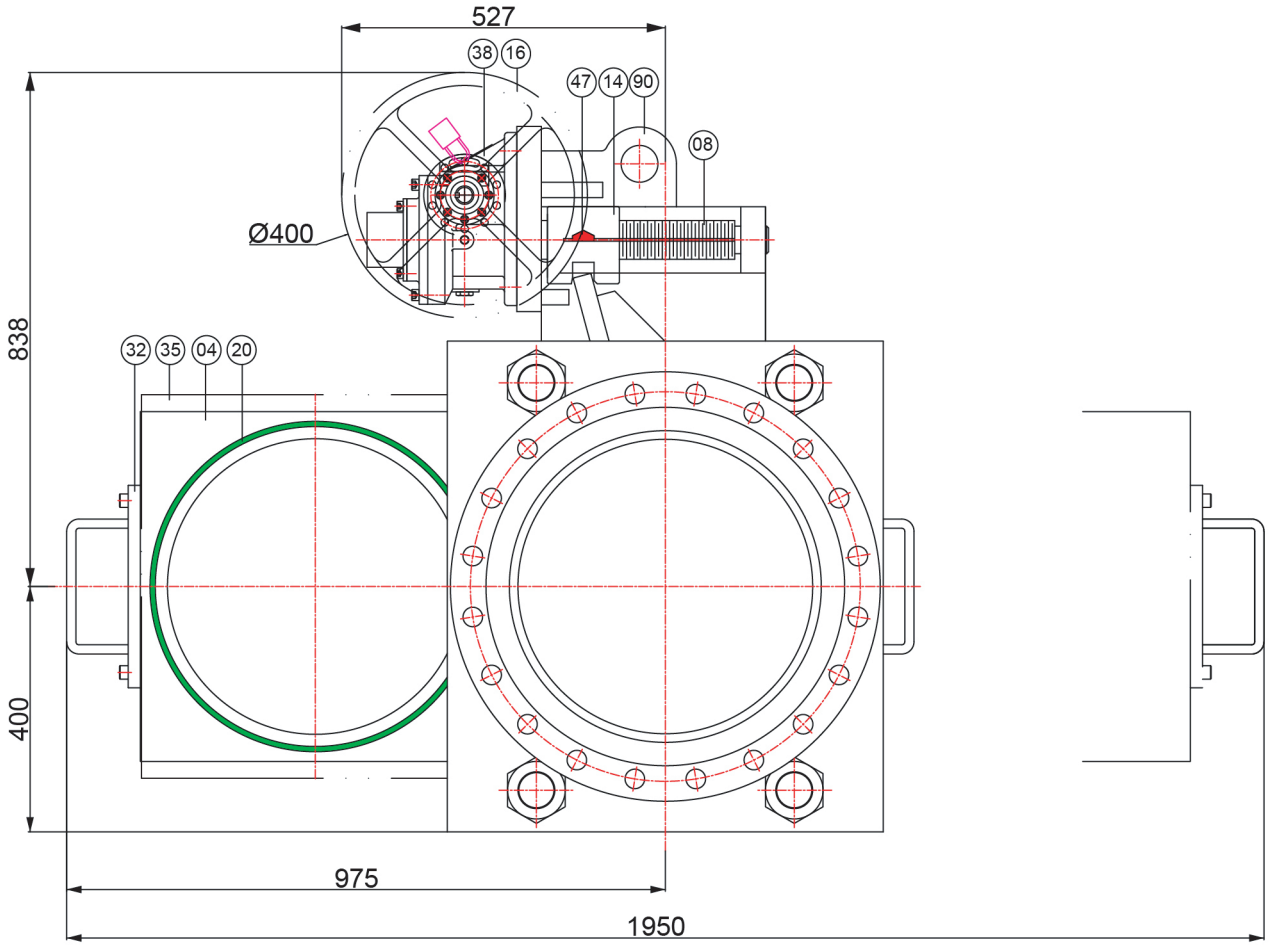

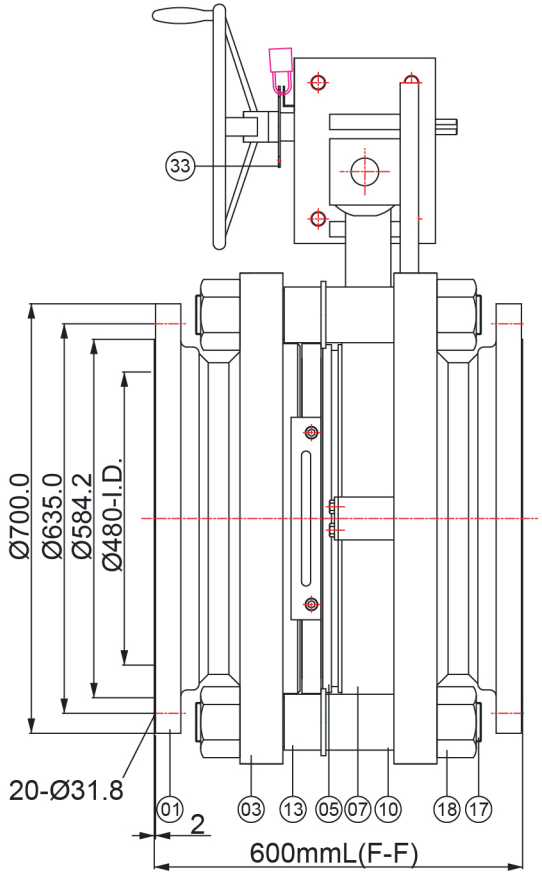

Design Note

Media :
Operation : Hand Wheel & Worm gear
Pressure Rating : ASME CLASS 150
End Connection : ASME B16.5 Flanged RF
Design Pressure : 10 kg/cm^2
Design Temperature : Ambient
Seat Hyd. Test : 11 kg/cm^2
Shell Hyd. Test : 15 kg/cm^2
F-F dimension : 600 mm
*Gasket : Viton O-ring (Hardness Shore 70)

Specification Of Compliance

Material : ASME/ASTM/JIS Standard
Flange : ASME B16.5
Body : ASME B16.34
Stream Plate : ASME Sec. VIII Div.1 App.2
Blind : ASME B31.3 para 304.5.3
Welding Qualifications : ASME Sec. IX
Inspection and Test : ASME B16.34

No.	PART NUMBER	PART NAME	MATERIAL	Q'TY	REMARK	No.	PART NUMBER	PART NAME	MATERIAL	Q'TY	REMARK
91	SL20AN150M304LG	LUG	SA240-304	1		16	SL20AN150M126WH	HAND WHEEL	SA126-B	1	O.D. 400mm
47	SL20AN150M103ID	INDICATOR	SB103	1		14	SL20AN150M103TN	TRAVELING NUT	SB103	1	
38	SL20AN150MSJ73	Wormgear Ass'y	P	1		13	SL20AN150M304GU	GUIDE ROLLER	SA276-304	4	
35	SL20AN150M304CO	GASKET COVER	SA240-304	1		10	SL20AN150M304YO	YOKE	SA276-304	4	
32	SL20AN150M304LD	LOCKING DEVICE	SA240-304	1		08	SL20AN150M304SC	SCREW SHAFT	SA276-304	1	
32	SL20AN150M304EN	END PLATE	SA240-304	2		07	SL20AN150M304GE	GEARSET	SA240-304	1	
23	SL20AN150MGRWP	WIPER	GRAPHITE	1		05	SL20AN150M304SE	SEAT	SA240-304	1	
22	SL20AN150MFKMOR	SEAT O-RING	FKM	1	10mmT x I.D. 500mm	04	SL20AN150M304BL	BLIND PLATE	SA240-304	1	
20	SL20AN150MFKMOR	BLIND O-RING	FKM	4	10mmT x I.D. 500mm	03	SL20AN150M304ST	STREAM PLATE	SA240-304	2	
18	SL20AN150M8NU	HEX.NUT	SA194-8	8		02	SL20AN150M304PI	PIPE	SA240-304	2	
17	SL20AN150MB8BO	STUD BOLT	SA193-B8	4		01	SL20AN150M304FL	FLANGE	SA182-F304	2	B16.5 150# RF

SERIES: SLFX-150	NAME/CLASS: LINE BLIND V/V (Sliding Type) ASME CLASS150, NPS20"	DWN	Aug.10.2021	S.J.Hwang
MODEL: SL20-AN150-304/304/FKM		CHKD	Aug.10.2021	K.J.Kim
DRAWING NO.: SLW 210522-Q-4		APRV	Aug.10.2021	B.R.Kim

SAMMI MACHINERY Co., Ltd.
LINE BLIND SYSTEM

Projection	CAD	PROJECT	N.WEIGHT	PAGE
Dimension	mm	APPROVED BY CUSTOMER	abt. 900kg	4/4

Any unauthorized review, use, disclosure or distribution is prohibited.